ADVERTISING TENT PLUS 20X20

Assembly Instructions | R1.082718

ASSEMBLY HARDWARE

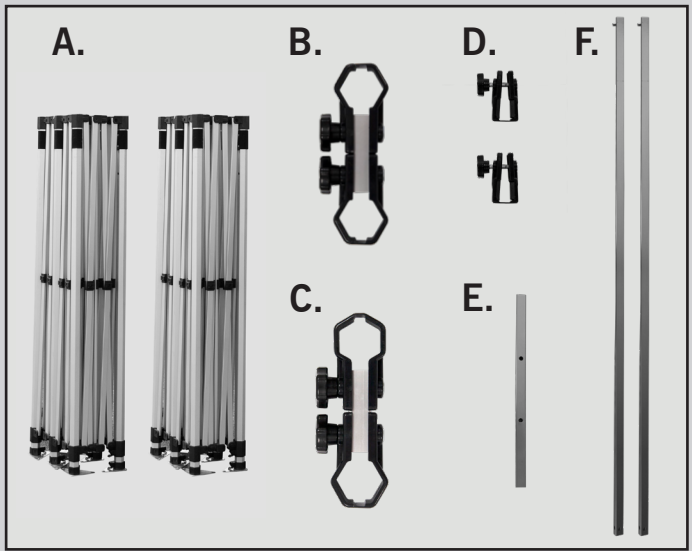

A. (2) 10x20 Frames
B. (2) Flat/Flat Clamp
C. (4) Pointed/Flat Clamp
D. Support Bar Clamps
E. Middle Support Pole
F. Support Poles

ASSEMBLY

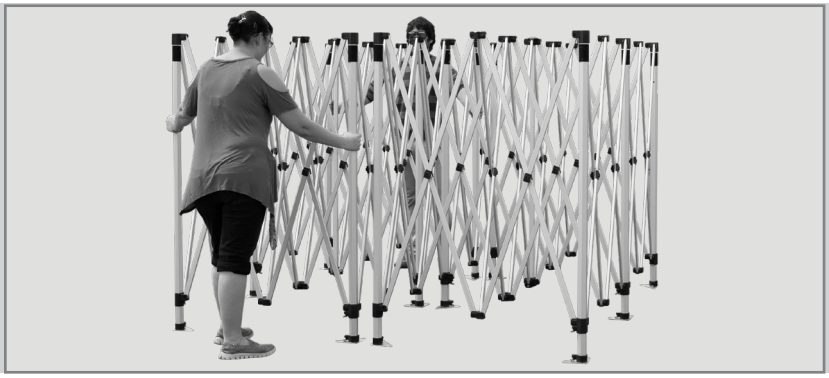

NOTE: Four or more people are required for assembly

1. Set the two 10x10 frames down on a clean, dry surface.
2. Expand each tent frame about 1/4 of the way. Place frames next to each other along the 20ft side. Ensure the inside edges of both frames are lined up.

Over the Top View of 20x20 Tent: clamps and canopy installation

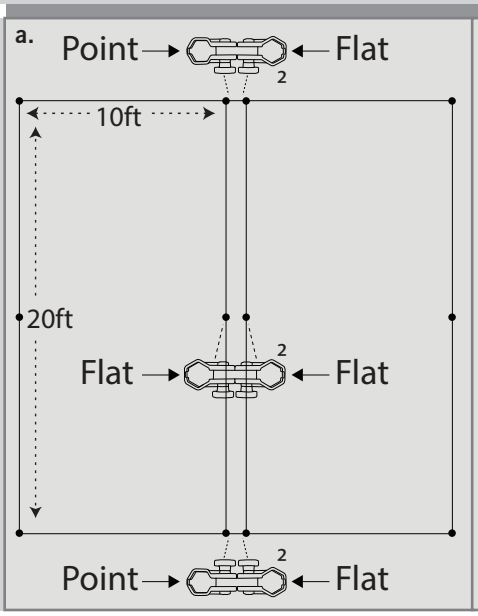

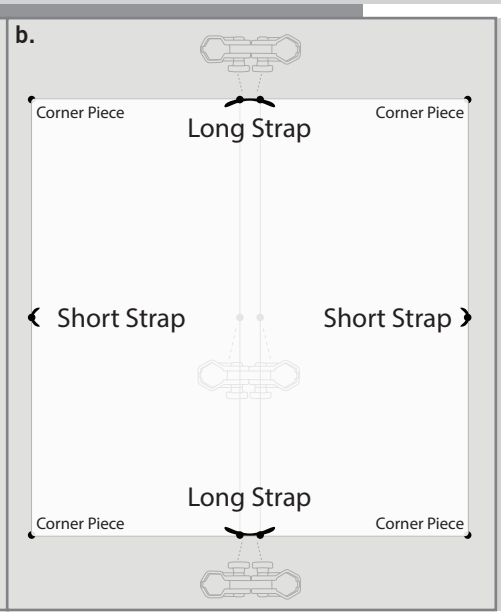

3. Using the diagram (a), clamp together the center legs where the two 10x20 tent frames meet.
4. Clamp two of the pointed-flat clamps to the top and above the leg height adjuster of each exterior center pair of legs.
5. Clamp two of the flat-flat clamps to the top and bottom of each interior center pair of legs.
6. Place canopy over the frame. Make sure the print is facing the correct direction. First attach the **Long Strap** loop fastener to the center pair of exterior legs, followed by the **Short Strap** and finally the **Corner Pieces.**

DISCLAIMER: Tents should always be staked down with Premium Tent Stake Kit and weighed down. Tent should be completely deflated before folding it up. Tents should not be used in inclement weather, including thunderstorms, heavy rains, lightening, and high winds. No grill or any type of open flame is to be used under or near the tent. User must read and observe assembly instructions. If this is not done correctly, it may result in damage to the unit, injury, or death, and all warranties will be void. All warranties will be void if hardware is used with any print not produced by us. Properly care for prints to keep them in great condition. Prints should never be dragged along the ground or stored without being properly folded and free from moisture. Make sure print is completely dried from any weather, and fold and store in a clean, dry place. We don't recommend storing print on frame.

Expanding, Clamping, & Fastening

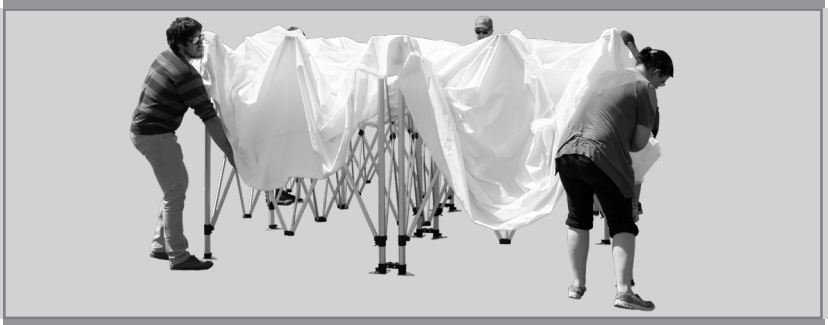

7. Grab the four corners of the 20x20 tent frame and pull outward.

8. Push the locking clips upward to help expansion.

9. The exterior locking clips will snap into place to indicate full expansion of the outer frame.

10. Finally, push interior locking clips fully upward until they snap into place. Due to tension from both of the frames the locking clips may resist to snap into place. Ensure that all the tent legs are fully expanded for proper setup.

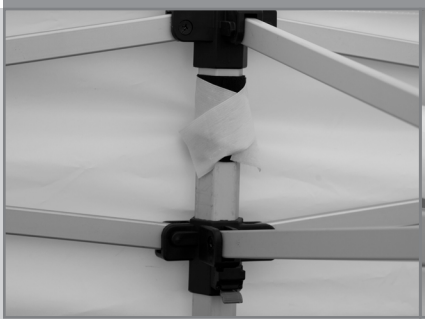

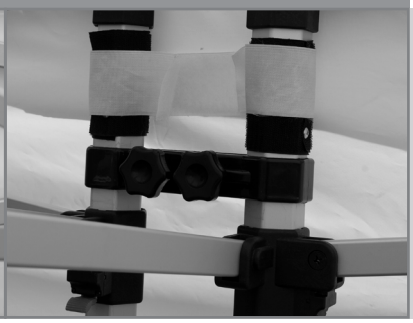

11. Check to make sure the loop fasteners are properly attached to each exterior leg. This will insure that the canopy is correctly attached.

DISCLAIMER: Tents should always be staked down with Premium Tent Stake Kit and weighed down. Tent should be completely deflated before folding it up. Tents should not be used in inclement weather, including thunderstorms, heavy rains, lightening, and high winds. No grill or any type of open flame is to be used under or near the tent. User must read and observe assembly instructions. If this is not done correctly, it may result in damage to the unit, injury, or death, and all warranties will be void. All warranties will be void if hardware is used with any print not produced by us. Properly care for prints to keep them in great condition. Prints should never be dragged along the ground or stored without being properly folded and free from moisture. Make sure print is completely dried from any weather, and fold and store in a clean, dry place. We don't recommend storing print on frame.

Securing Peak & Leg Adjustment

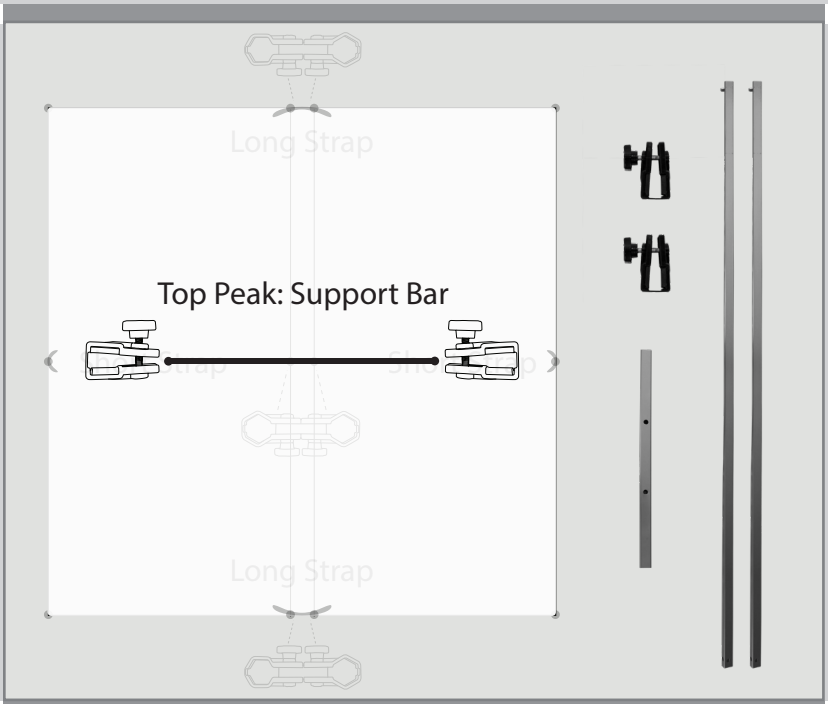

12. To give support to the peak of your canopy use the Top Peak Support Bar - 2 clamps, 2 long bars, 1 short bar.

13. Attach the 3 support bars together: slide one support pole with the click button into the center support pole.

14. Repeat this step for the other support pole.

15. Locate peak post for the canopy. Safely use a stool to assemble clamp at the top of the peak post.

16. Attach support bar clamps around peak post as high as possible. With help, have someone hold up the support bar. Unscrew knobs completely from the clamps and slip the clamps around the post.

17. Place appropriate end of the support bar through the opening of the clamp. Tighten knob. Repeat with second clamp for remaing peak post.

18. Once the Top Peak Support Bar is fully assembled, adjust the tent legs to desired height. Make sure the locking clips snap into place. Standing and using your foot to hold down the tent foot makes this step easier.

DISCLAIMER: Tents should always be staked down with Premium Tent Stake Kit and weighed down. Tent should be completely deflated before folding it up. Tents should not be used in inclement weather, including thunderstorms, heavy rains, lightening, and high winds. No grill or any type of open flame is to be used under or near the tent. User must read and observe assembly instructions. If this is not done correctly, it may result in damage to the unit, injury, or death, and all warranties will be void. All warranties will be void if hardware is used with any print not produced by us. Properly care for prints to keep them in great condition. Prints should never be dragged along the ground or stored without being properly folded and free from moisture. Make sure print is completely dried from any weather, and fold and store in a clean, dry place. We don't recommend storing print on frame.

ADVERTISING TENT PLUS 20X20

Assembly Instructions | R1.082718

Attaching Full Walls

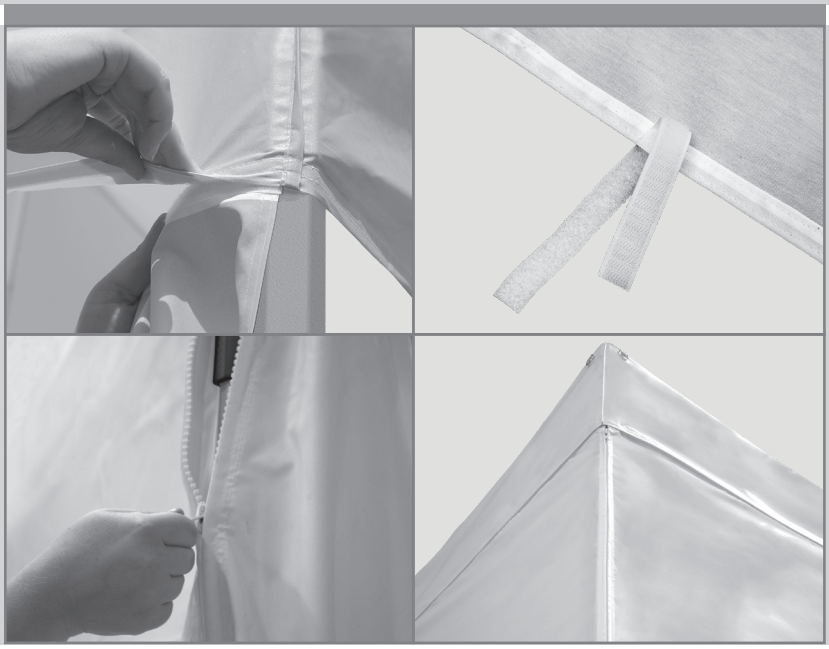

1. When adding the tent wall(s), the legs of the frame must be at their maximum extension height. Attach the wall's loop fastener to the hook fastener on the tent valance.
2. Secure the sides of the wall by wrapping the hook-and-loop fastener tabs around the tent legs.
3. If the tent wall features zippers, walls can be connected by closing the zipper from bottom to the top.

Attaching Half Walls

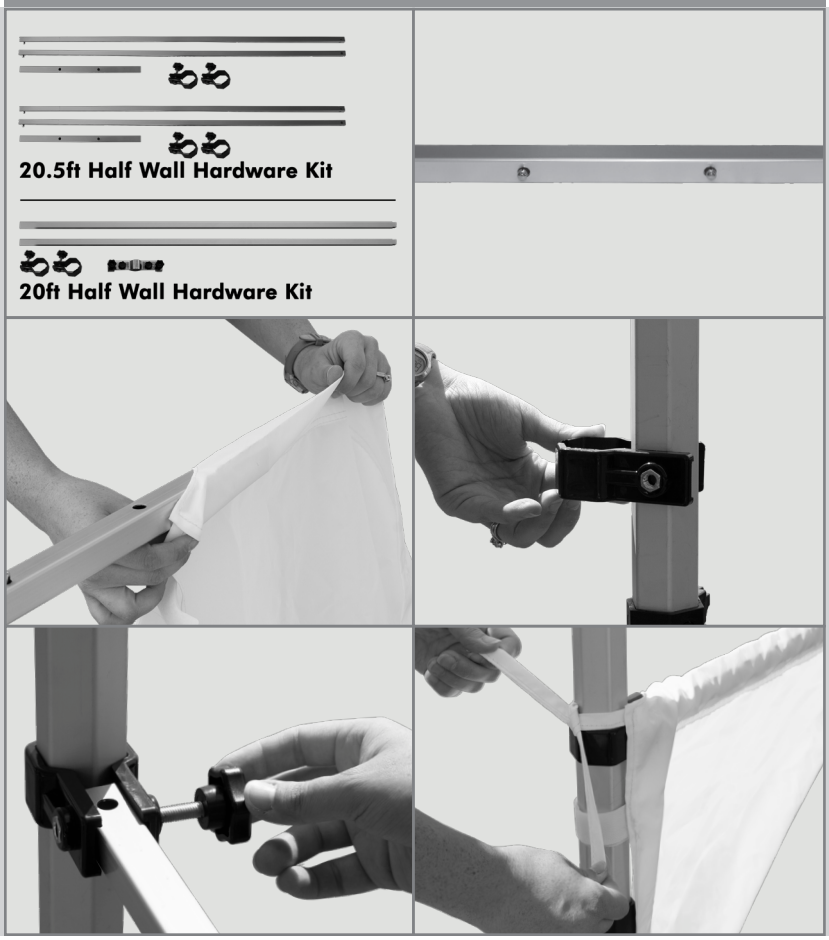

NOTE: If attaching two or more half walls, you must stagger the height of the adjoining half walls or use a 90° corner clamp.

1. Slide one support pole with the click button into the center support pole. Once the button snaps through the first hole, repeat this step with the second pole.
2. Slide the half wall support bar through the print's pole sleeve. The support bar should go through the entire pole sleeve, with both ends of the pole sticking out from either end of the half wall.
3. Attach the half wall clamps to tent legs. Unscrew the knobs completely from the clamps and slip the clamps around the tent legs.
4. Place the appropriate end of the half wall support bar through the opening of the clamp. Place the tightening knob into the open holes and hand tighten the knob. Repeat this step with the second clamp and support pole.
5. Secure the hook-and-loop fastener tabs of the half wall around the tent legs. On stock walls only, tie half wall down against the tent leg.

*****For the 20ft side there is a 180º center connecter included in the hardware set, which will allow for even wall installation.**

DISCLAIMER: Tents should always be staked down with Premium Tent Stake Kit and weighed down. Tent should be completely deflated before folding it up. Tents should not be used in inclement weather, including thunderstorms, heavy rains, lightening, and high winds. No grill or any type of open flame is to be used under or near the tent. User must read and observe assembly instructions. If this is not done correctly, it may result in damage to the unit, injury, or death, and all warranties will be void. All warranties will be void if hardware is used with any print not produced by us. Properly care for prints to keep them in great condition. Prints should never be dragged along the ground or stored without being properly folded and free from moisture. Make sure print is completely dried from any weather, and fold and store in a clean, dry place. We don't recommend storing print on frame.

Base Plate Installation

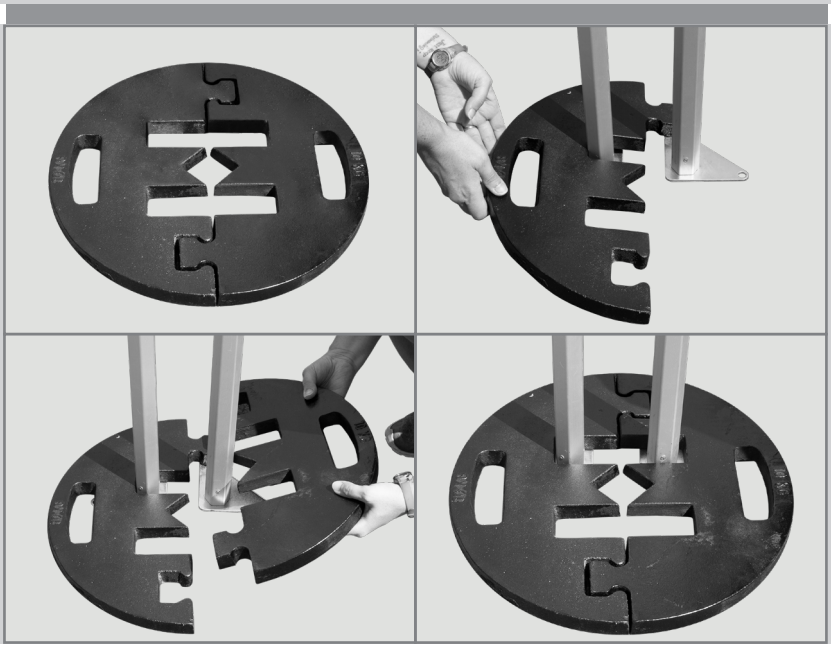

1. Ensure you have both halves of the base plate.
2. Slide one of the half-rectangle cutouts of the base plate over one of the tent legs.
3. Slide the other base plate with the half-rectangle cutout over the second tent leg.
4. Make sure the two base plate halves are locked together.

***For corners with 1 tent leg only, the square center cutout will be used.**

DISCLAIMER: Tents should always be staked down with Premium Tent Stake Kit and weighed down. Tent should be completely deflated before folding it up. Tents should not be used in inclement weather, including thunderstorms, heavy rains, lightening, and high winds. No grill or any type of open flame is to be used under or near the tent. User must read and observe assembly instructions. If this is not done correctly, it may result in damage to the unit, injury, or death, and all warranties will be void. All warranties will be void if hardware is used with any print not produced by us. Properly care for prints to keep them in great condition. Prints should never be dragged along the ground or stored without being properly folded and free from moisture. Make sure print is completely dried from any weather, and fold and store in a clean, dry place. We don't recommend storing print on frame.